8.1. VARIJABLE STANJA

→ gledamo unutar sustava osim izlaza

Primjer 1.) Sustav za usrednjavanje

$$y[n] = \frac{1}{L+1}\sum_{m=0}^{L} u[n-m]$$

↳ čista aritm. sredina 4 broja

$$L=3 \rightarrow y[n] = \frac{1}{4}\sum_{m=0}^{3} u[n-m] = \frac{1}{4}u[n] + \underbrace{\frac{1}{4}\overbrace{u[n-1]}^{x_1[n]} + \frac{1}{4}\overbrace{u[n-2]}^{x_2[n]} + \frac{1}{4}\overbrace{u[n-3]}^{x_3[n]}}$$

odziv → ovisi o ulazu u trenutku n i o 3 prošla trenutka

- moramo spremiti u memoriji
- varijabla stanja

VARIJABLA STANJA:

$$x[n] = \begin{bmatrix} x_1[n] \\ x_2[n] \\ x_3[n] \end{bmatrix} = \begin{bmatrix} u[n-1] \\ u[n-2] \\ u[n-3] \end{bmatrix}$$

ako se radi o kauzalnom sustavu (prije 0 je sve 0)

↳ $n=0$ $\quad x[0] = \begin{bmatrix} x_1[0] \\ x_2[0] \\ x_3[0] \end{bmatrix}$ ⇒ početno stanje sustava

Znači, odziv sustava:

$$y[n] = \frac{1}{4}u[n] + \frac{1}{4}x_1[n] + \frac{1}{4}x_2[n] + \frac{1}{4}x_3[n]$$

→ znači i to bismo mogli zapisati u vektorskom obliku

$$y[n] = \underbrace{\begin{bmatrix} \frac{1}{4} & \frac{1}{4} & \frac{1}{4} \end{bmatrix}}\begin{bmatrix} x_1[n] \\ x_2[n] \\ x_3[n] \end{bmatrix} + \frac{1}{4}u[n]$$

$$\boxed{y[n] = C \cdot \overbrace{x[n]} + \overbrace{D \cdot u[n]}}$$

→ nije dovoljno za odziv jer nam treba nešto što bi objasnilo stanje $x[n+1]$

$$x[n+1] = \begin{bmatrix} x_1[n+1] \\ x_2[n+1] \\ x_3[n+1] \end{bmatrix} = \begin{bmatrix} u[n] \\ u[n-1] \\ u[n-3] \end{bmatrix} = \begin{bmatrix} u[n] \\ x_1[n] \\ x_2[n] \end{bmatrix}$$

→ stanje u sljed. trenu ovisi o trenutnom ulazu i o ova dva stanja u sadaš.

Izlazna jednadžba ; C = izlazna mat

D = ulaz-izlaz mat

$$x[n+1] - \begin{bmatrix} x_1[n+1] \\ x_2[n+1] \\ x_3[n+1] \end{bmatrix} = \begin{bmatrix} u[n] \\ u[n-1] \\ u[n-2] \end{bmatrix} = \begin{bmatrix} u[n] \\ x_1[n] \\ x_2[n] \end{bmatrix}$$

$$x[n+1] = \begin{bmatrix} 0 & 0 & 0 \\ 1 & 0 & 0 \\ 0 & 1 & 0 \end{bmatrix}\begin{bmatrix} x_1[n] \\ x_2[n] \\ x_3[n] \end{bmatrix} + \begin{bmatrix} 1 \\ 0 \\ 0 \end{bmatrix} u[n]$$

$$\boxed{x[n+1] = \underbrace{A}_{\text{mat. sustava}} \cdot x[n] + \underbrace{B}_{\text{ulazna mat}} \cdot u[n]}$$

jednadžba stanja

Realizacija dijagrama: krećemo od $y[n]=\frac{1}{4}u[n]+\frac{1}{4}u[n-1]+\frac{1}{4}u[n-2]+\frac{1}{4}u[n-3]$

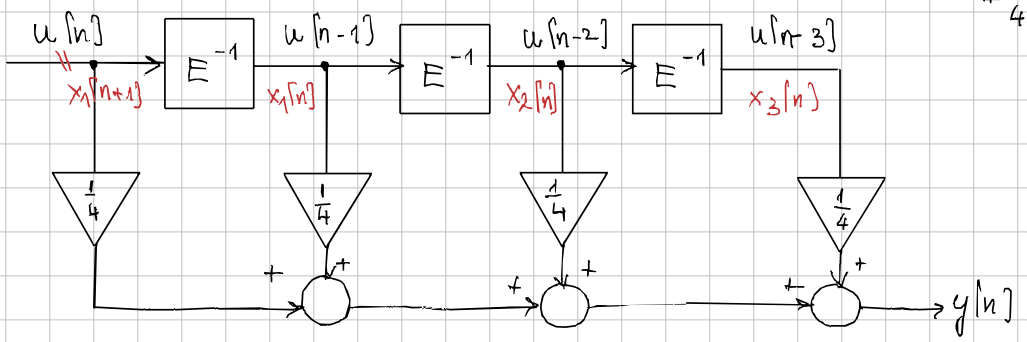

Drugi slučaj: 2° $y[n]+a_1y[n-1]+a_2y[n-2]=b_0u[n]+b_1u[n-1]+b_2u[n-2]$

brzinsko podjeđivanje:

1) $y_a[n]+a_1y_a[n-1]+a_2y_a[n-2]=u[n]$

$y_a[n]=u[n]-a_1\cdot y_a[n-1]-a_2y_a[n-2]$

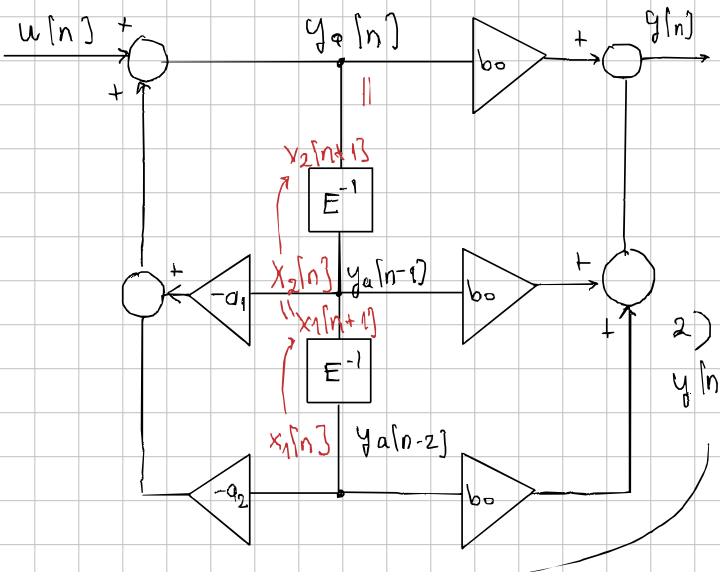

linearnost $au[n]\to ay[n]$

vremenska nepromjenj. $u[n-1]\to y[n-1]$

→ budući da imamo dva elemenata za kašnjenje, trebamo i 2 var. stanja

2) umjesto izlaza $y_a[n]$

$y[n]=b_0y_a[n]+b_1y_a[n-1]+b_2y_a[n-2]$

$$y[n]=b_0\left[u[n]-a_1y_a[n-1]-a_2y_a[n-2]\right]+b_1y_0[n-1]+b_2y_0[n-2]$$

$$=(b_2-a_2b_0)y_0[n-2]+(b_1-a_1b_0)y_0[n-1]+b_0\cdot u[n]$$

$$y[n]=(b_2-a_2b_0)\cdot x_1[n]+(b_1-a_1b_0)\cdot x_2[n]+b_0\cdot u[n]$$

$$=\underbrace{\begin{bmatrix}(b_2-a_2b_0) & (b_1-a_1b_0)\end{bmatrix}}_{C}\begin{bmatrix}x_1[n]\\x_2[n]\end{bmatrix}+\underbrace{b_0}_{D}\cdot u[n]$$

$$y[n]=C\cdot x[n]+D\cdot u[n]$$

$$x[n+1]=\begin{bmatrix}x_1[n+1]\\x_2[n+1]\end{bmatrix}$$

$$x_1[n+1]=x_2[n]$$

$$x_2[n+1]=y_0[n]=u[n]-a_1\underbrace{y_0[n-1]}-a_2\underbrace{y_0[n-2]}$$

$$=u[n]-a_1x_2[n]-a_2x_1[n]$$

$$x[n+1]=\begin{bmatrix}x_1[n+1]\\x_2[n+1]\end{bmatrix}=\underbrace{\begin{bmatrix}0 & 1\\-a_2 & -a_1\end{bmatrix}}_{A}\underbrace{\begin{bmatrix}x_1[n]\\x_2[n]\end{bmatrix}}_{x[n]}+\underbrace{\begin{bmatrix}0\\1\end{bmatrix}}_{B}\cdot u[n]$$

$$x[n+1]=A\cdot x[n]+B\cdot u[n]$$

$$y[n]=C\cdot x[n]+D\cdot u[n]$$

→ Sustav sa više ulaza i više izlaza

$$y_1[n] = 2\cdot u_1[n] + 3u_2[n]$$

$$y_2[n] = 3y_2[n-1] + 3u_1[n-1] + y_1[n-1]$$

$$y_3[n] = 4u_2[n]$$

Sve promatramo za kauzalne sust.

$$u[n] = \begin{bmatrix} u_1[n] \\ \vdots \\ u_M[n] \end{bmatrix}$$

$x[0]$ = poč. stanj

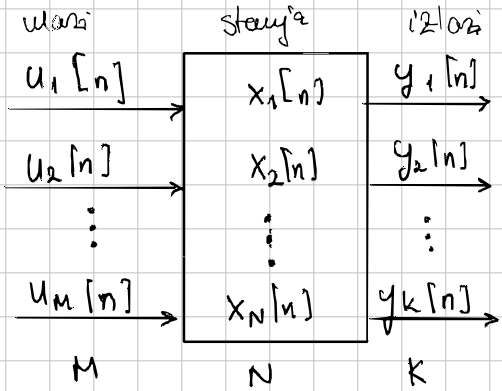

$$x[n] = \begin{bmatrix} x_1[n] \\ \vdots \\ x_N[n] \end{bmatrix}$$

$$y[n] = \begin{bmatrix} y_1[n] \\ \vdots \\ y_k[n] \end{bmatrix}$$

$x_1[n+1]$ = može ovisiti o svim var. stanja u trenutnom koraku

$$= a_{11}x_1[n] + a_{12}x_2[n] + \dots + a_{1N}x_N[n]$$

$$+ b_{11}u_1[n] + b_{12}u_2[n] + \dots + b_{1M}\cdot u_M[n]$$

$$x_2[n+1] = a_{21}x_1[n] + a_{22}x_2[n] + \dots + a_{2N}\cdot x_N[n]$$

$$+ b_{21}\cdot u_1[n] + b_{22}u_2[n] + \dots + b_{2M}\cdot u_M[n]$$

$$x_N[n+1] = \dots$$

$$\begin{bmatrix} x_1[n+1] \\ x_2[n+1] \\ \vdots \\ x_N[n+1] \end{bmatrix} = \underbrace{\begin{bmatrix} a_{11} & a_{12} & \dots & a_{1N} \\ a_{21} & a_{22} & \dots & a_{2N} \\ \vdots & \vdots & & \vdots \\ a_{N1} & a_{N2} & \dots & a_{NN} \end{bmatrix}}_{A} \underbrace{\begin{bmatrix} x_1[n] \\ x_2[n] \\ \vdots \\ x_N[n] \end{bmatrix}}_{x[n]} + \underbrace{\begin{bmatrix} b_{11} & b_{12} & \dots & b_{1M} \\ b_{21} & b_{22} & \dots & b_{2M} \\ \vdots & \vdots & & \vdots \\ b_{N1} & b_{N2} & \dots & b_{NM} \end{bmatrix}}_{B} \underbrace{\begin{bmatrix} u_1[n] \\ u_2[n] \\ \vdots \\ u_M[n] \end{bmatrix}}_{u[n]}$$

$$\underset{}{x[n+1]} = \underset{(N\times N)}{A} \cdot \underset{(N\times 1)}{x[n]} + \underset{(N\times M)}{B} \cdot \underset{(M\times 1)}{u[n]}$$

$$\begin{bmatrix} y_1[n] \\ y_2[n] \\ \vdots \\ y_k[n] \end{bmatrix} = \underbrace{\begin{bmatrix} c_{11} & c_{12} & \dots & c_{1N} \\ \vdots & \vdots & & \vdots \\ c_{N1} & c_{N2} & \dots & c_{NN} \end{bmatrix}}_{C} \underbrace{\begin{bmatrix} x_1[n] \\ x_2[n] \\ \vdots \\ x_N[n] \end{bmatrix}}_{x[n]} + \underbrace{\begin{bmatrix} d_{11} & d_{12} & \dots & d_{1M} \\ \vdots & \vdots & & \\ d_{N1} & d_{N2} & \dots & d_{NM} \end{bmatrix}}_{D} \underbrace{\begin{bmatrix} u_1[n] \\ u_2[n] \\ \vdots \\ u_M[n] \end{bmatrix}}_{u[n]}$$

$$\underset{K\times 1}{y[n]} = \underset{(K\times N)}{C} \cdot \underset{(N\times 1)}{x[n]} + \underset{(K\times M)}{D} \cdot \underset{(M\times 1)}{u[n]}$$